Hillmar
Hillmar Industries Ltd.
7371 Vantage Way
Delta, BC V4G 1C9
P:604 946-7115 F:604 946-0329
info@hillmar.com www.hillmar.com

COUPLING GKM
GKM-ND-300-LSH-MSH
SPECIFICATION SHEET
SLS & MKTG
ENGLISH

Sheet Number:	
Job Number:	
Form Number:	429-630-35222PT

Company / Project Reference:	Date.:	Page.:	Document Package No.:	Rev.:
		1 OF 1		

Inventor Drawing

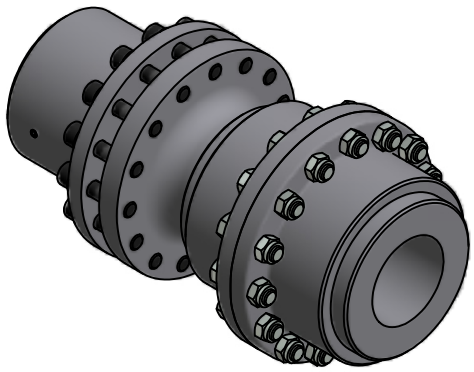

FEATURE	CODE
Gear coupling	GKM
No disc	ND
Coupling size (Hub OD)	300
Load side	LSH
Motor side	MSH
Maximum coupling torque (Nm)	27500

Examlpe for ordering	GKM-ND-300-LSH-MSH

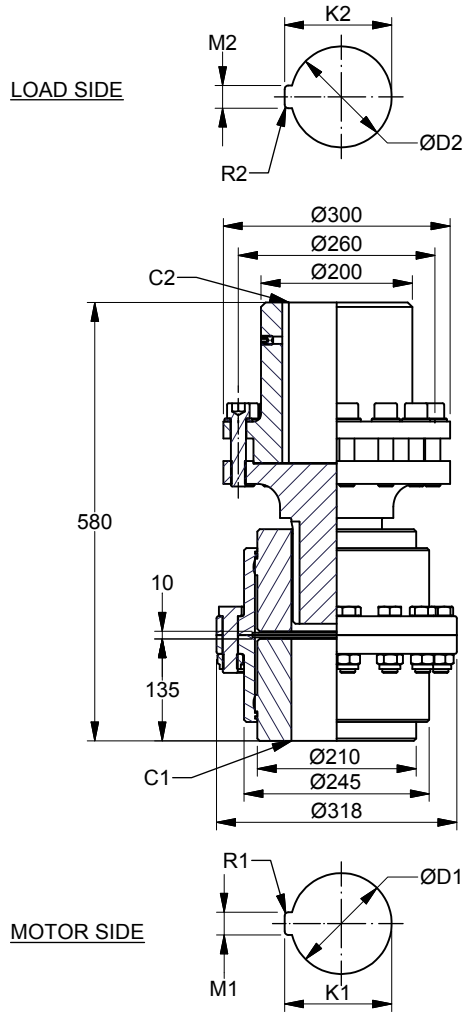

TECHNICAL DATA

Hub bore size MIN. (mm)	90
D1 MAX. (mm)	145
D2 MAX. (mm)	140
Moment of inertia (kgm^2)	4.249
Mounting bolts	15 x M20
Bolt tightening torque (Nm)	610
MAX. coupling torque TkMAX (Nm)	27500
NOM. coupling torque TkN (Nm)	11000
MAX. coupling speed (RPM)	2150
Weight (kg)	156,65

CUSTOMER SPECIFICATIONS

Motor side	Load side
D1:_____mm	D2:_____mm
M1:_____mm	M2:_____mm
K1:_____mm	K2:_____mm
R1:_____mm	R2:_____mm
C1:_____mm	C2:_____mm

NOTES

Coupling balancing grade ISO 1940-G6.3 is guaranteed for all coupling parts.

All figures are nominal figures only

All dimensions are in millimeters

Document Template #710-101-62058

** ALL TECHNICAL DATA IS SUBJECT TO CHANGE WITHOUT NOTICE **
Hillmar works have a fully registered ISO 9001-2008 quality assurance programme (QCB #01-1525)

C:\TEMP\a3f49bb3-e10c-4cd0-aed8-26c1c4c1b337\8000052816\9\HILLMAR\HILLMAR PRODUCTION\04 THRUSTER DB\0700-4\07004005 PKM-GKM-RKSM-RKX\SPC-SHT-PKM-GKM-RKSM-RKX\02 GKM\35222 GKM-ND-300-LSH-MSH.idw